Cambridge Assessment International Education

Cambridge International AS & A Level

CANDIDATE NAME	

CENTRE NUMBER						CANDIDATE NUMBER				

2125943835

PHYSICS **9702/31**

Paper 3 Advanced Practical Skills 1 **May/June 2021**

2 hours

You must answer on the question paper.

You will need: The materials and apparatus listed in the confidential instructions

INSTRUCTIONS

- Answer **all** questions.
- Use a black or dark blue pen. You may use an HB pencil for any diagrams or graphs.
- Write your name, centre number and candidate number in the boxes at the top of the page.
- Write your answer to each question in the space provided.
- Do **not** use an erasable pen or correction fluid.
- Do **not** write on any bar codes.
- You will be allowed to work with the apparatus for a maximum of 1 hour for each question.
- You should record all your observations in the spaces provided in the question paper as soon as these observations are made.
- You may use a calculator.
- You should show all your working and use appropriate units.

INFORMATION

- The total mark for this paper is 40.
- The number of marks for each question or part question is shown in brackets [ ].

For Examiner's Use	
1	
2	
Total	

This document has **12** pages. Any blank pages are indicated.

© UCLES 2021

You may not need to use all of the materials provided.

1 In this experiment, you will investigate the equilibrium of a metre rule.

(a) ● Use the adhesive putty to attach the 100 g mass to the metre rule as close as possible to the 80 cm mark, as shown in Fig. 1.1.

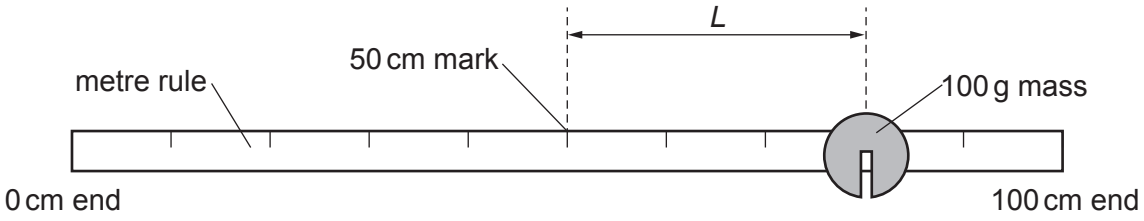

Fig. 1.1

● The distance between the 50 cm mark and the centre of the mass is *L*.

Measure and record *L*.

L = ... [1]

(b) ● Set up the apparatus as shown in Fig. 1.2.

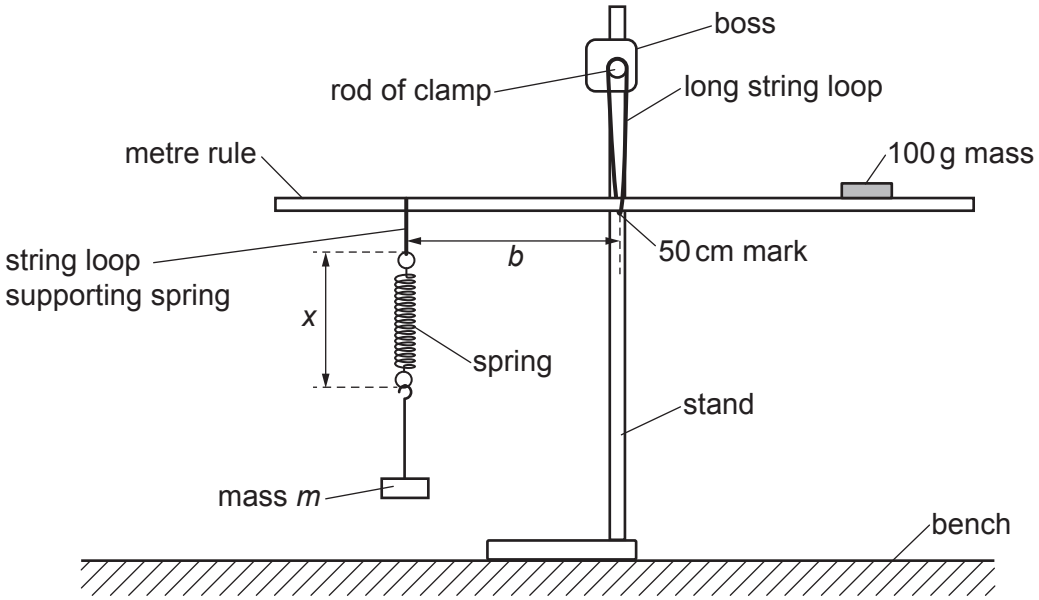

Fig. 1.2

- Suspend the rule from the long string loop at the 50 cm mark on the rule.
- Add the two 50 g masses to the mass hanger to make a total mass *m* of 110 g. Suspend mass *m* from the spring.
- Record *m*.

m = ... g

- The distance between the string loop supporting the spring and the 50 cm mark on the rule is *b*.

  The distance between the top of the top loop of the spring and the bottom of the bottom loop of the spring is *x*, as shown in Fig. 1.2.

  Adjust the position of the string loop supporting the spring until the rule is horizontal and in equilibrium.

- Measure and record *x* and *b*.

x = ...

b = ...

[1]

(c) Repeat **(b)** with different values of m until you have six sets of readings. Record m, x and b. Include your values from **(b)**.

Record your results in a table. Include values of $\frac{1}{b}$ in your table.

[9]

(d) **(i)** Plot a graph of $\frac{1}{b}$ on the y-axis against x on the x-axis. [3]

(ii) Draw the straight line of best fit. [1]

(iii) Determine the gradient and y-intercept of this line.

gradient = ...

y-intercept = ...

[2]

© UCLES 2021

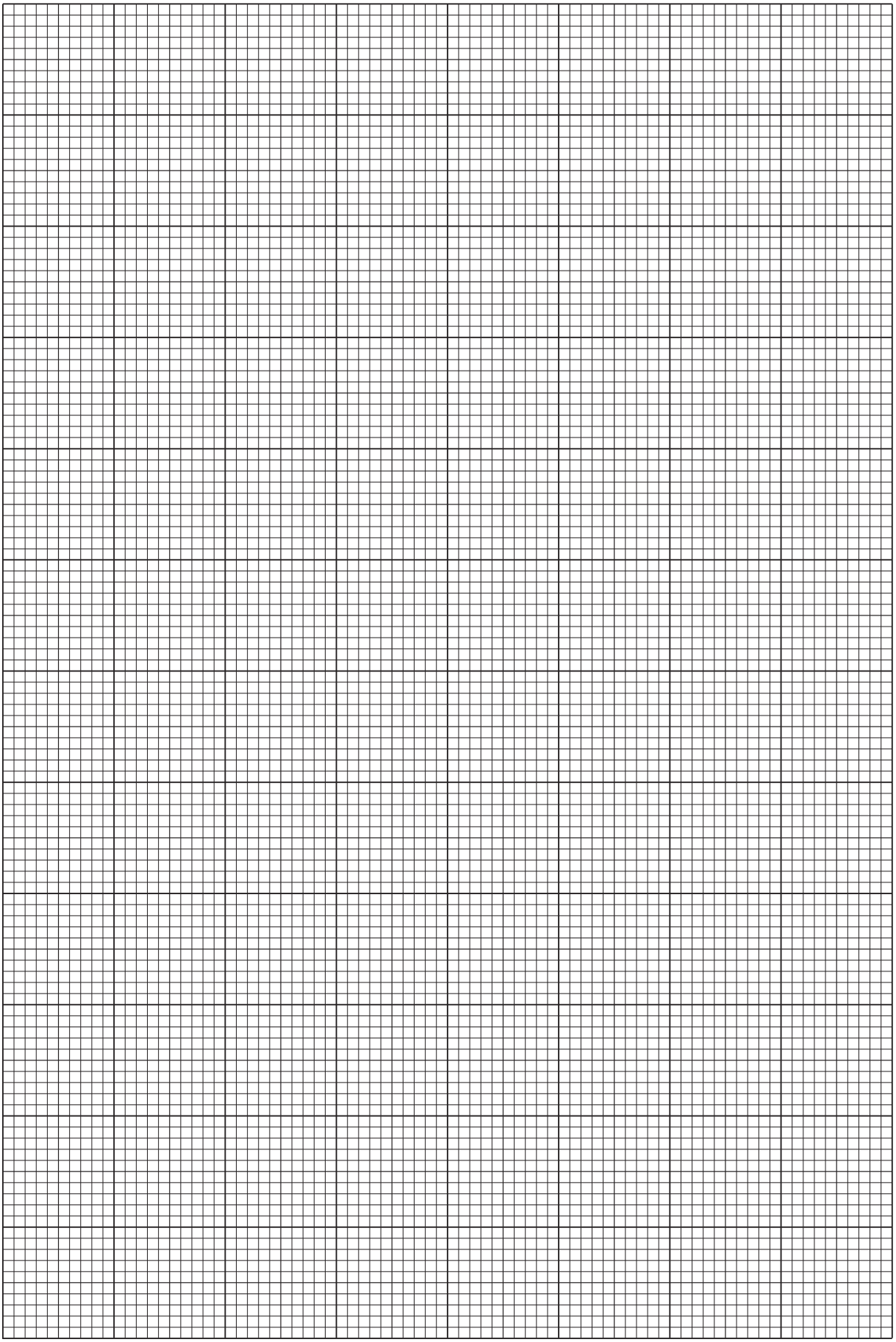

© UCLES 2021

[Turn over

(e) It is suggested that the quantities b and x are related by the equation

$$\frac{1}{b} = Px + Q$$

where P and Q are constants.

Using your answers in **(d)(iii)**, determine values for P and Q.
Give appropriate units.

P = ...

Q = ...
[2]

(f) A student repeats the experiment placing the 100 g mass closer to the 50 cm mark on the rule.

Theory suggests that P and Q are both inversely proportional to L.

For this experiment, draw a second line on the graph to show the expected results.
Label this line W. [1]

[Total: 20]

You may not need to use all of the materials provided.

2 In this experiment, you will investigate how the rate of cooling of a hot liquid depends on its volume.

(a) You have been provided with a cup. The diameter of the base of the cup is *d*, as shown in Fig. 2.1.

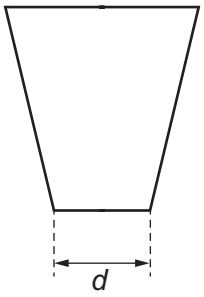

Fig. 2.1

Measure and record *d*.

d = ... [1]

(b)
- Pour boiling water into the cup until it is approximately one-third full.
- When the temperature of the water is 75 °C, start the stop-watch.

  Record this starting temperature θ_0.

  θ_0 = ... °C
- After two minutes, measure and record the temperature θ.

  θ = ... °C
- Calculate $\Delta\theta$ using

$$\Delta\theta = (\theta_0 - \theta).$$

$\Delta\theta$ = ... °C
[1]

(c) (i) The height of the water in the cup is h and the diameter of the surface of the water is D, as shown in Fig. 2.2.

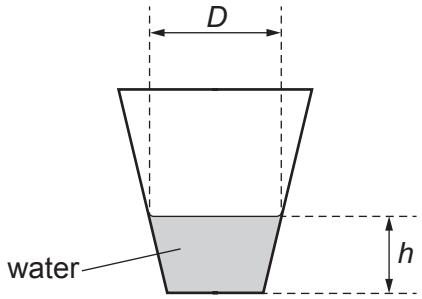

Fig. 2.2

Measure and record h and D.

h = ...

D = ...
[2]

(ii) Estimate the percentage uncertainty in your value of h. Show your working.

percentage uncertainty = ... [1]

(iii) Calculate C where

$$C = \frac{D^3 - d^3}{D - d}.$$

C = ... [1]

(iv) Justify the number of significant figures that you have given for your value of C.

.....

.....

..... [1]

(d) ● Empty the cup.

● Repeat **(b)**, **(c)(i)** and **(c)(iii)** with the cup approximately two-thirds full.

θ_0 = ... °C

θ = ... °C

$\Delta\theta$ = ... °C

h = ...

D = ...

C = ...

[3]

(e) It is suggested that the relationship between $\Delta\theta$, h and C is

$$\Delta\theta = \frac{k}{\sqrt{(hC)}}$$

where k is a constant.

(i) Using your data, calculate two values of k.

first value of k = ...

second value of k = ...
[1]

(ii) Explain whether your results support the suggested relationship.

.....

.....

.....

..... [1]

(f) **(i)** Describe four sources of uncertainty or limitations of the procedure for this experiment.

1. .....

.....

2. .....

.....

3. .....

.....

4. .....

.....

[4]

(ii) Describe four improvements that could be made to this experiment. You may suggest the use of other apparatus or different procedures.

1. .....

.....

2. .....

.....

3. .....

.....

4. .....

.....

[4]

[Total: 20]

BLANK PAGE

Permission to reproduce items where third-party owned material protected by copyright is included has been sought and cleared where possible. Every reasonable effort has been made by the publisher (UCLES) to trace copyright holders, but if any items requiring clearance have unwittingly been included, the publisher will be pleased to make amends at the earliest possible opportunity.

To avoid the issue of disclosure of answer-related information to candidates, all copyright acknowledgements are reproduced online in the Cambridge Assessment International Education Copyright Acknowledgements Booklet. This is produced for each series of examinations and is freely available to download at www.cambridgeinternational.org after the live examination series.

Cambridge Assessment International Education is part of the Cambridge Assessment Group. Cambridge Assessment is the brand name of the University of Cambridge Local Examinations Syndicate (UCLES), which itself is a department of the University of Cambridge.

© UCLES 2021